Instruction manual

2026-10-09

Cooking range solid top gas
STPS 708 G

www.rmgastro.com

TABLE OF CONTENTS

1. DECLARATION OF CONFORMITY 3

2. TECHNICAL DATA 3

3. TABLE OF GASES FOR WHICH THE PRODUCT IS INTENDED 3

4. LOCATION GAS 4

5. SAFETY MEASURES FOR FIRE PROTECTION 4

6. INSTALLATION 5

7. THERMAL OUTPUT CHECK 5

8. CONNECTING GAS CONNECTION HOSE 5

9. LIQUID GAS CONNECTION 5

10. CHECK DEVICE SETTINGS FOR GAS TYPE 6

11. TECHNICAL DATA OF BURNERS 6

12. CHECK OF THE DEVICE SETTINGS FOR THE TYPE OF GAS 7

13. CHECK THE GAS TYPE THE DEVICE IS ADJUSTED FOR THAL 9

14. INSTRUCTIONS FOR USE 10

15. INSTRUCTIONS FOR USE 10

16. NOTICE FOR USE – FOR GAS OVENS 11

17. CLEANING AND MAINTENANCE 12

1. DECLARATION OF CONFORMITY

Decree of the Ministry of Health of the Czech Republic no. 38/2001 Coll. of 19 January 2001 Regulation (EC) No 1907/2006 - Registration, Evaluation, Authorisation and Restriction of Chemicals (REACH) Regulation of the European Parliament and Council Regulation (EC) no. 1935/2004 of 27 October 2004

The products meet the requirements of §26 of Act No.258/2000 as amended. The products meet the requirements of RoHS Directive 2015/863/EU, 10/2011, 517/2014, 2015/1094, 2015/1095.

Attention, the manufacturer gives up any responsibility in case of direct and indirect damage that is relate to poor installation, incorrect intervention or adjustments, insufficient maintenance, incorrect by using and which are eventually caused by other causes that the points referred to in the conditions sales. This appliance is intended only for professional use and must be operated by qualified by persons. Parts that have been secured by the manufacturer or authorized worker after the setting rebuild.

2. TECHNICAL DATA

The label with technical data is located on the side or back panel of the device. Please read the wiring diagram and all the following information in the attached manual before installation.

Net Width [mm]	Net Depth [mm]	Net Height [mm]	Net Weight [kg]	Power gas [kW]
800	300	300	70.70	19.100

Gross depth [mm]	Gross Height [mm]	Number of burners/hot plates	Solid top thickness [mm]	Gross Volume [m3]
800	480	3	30	0.323

Net Volume [m3]	Gross Weight [kg]	Gross Width [mm]	Worktop Thickness [mm]
0.175	79.50	840	1.50

The maximum and reduced nominal heat input in kW is related to the Hi of the gas used. If the product is connected to LPG, the gas cylinder must be in sufficiently ventilated rooms.

3. TABLE OF GASES FOR WHICH THE PRODUCT IS INTENDED

Execution	Product Category	Connection overpressures (mbar)	Used gas	Country of destination
A1	I2E	20	G20	DE, NL, PL, RO
A1	I2ELL	20, 20	G20,G25	DE
A1	I2E+	20/25	G20/G25	BE, FR
A1	I2H	20	G20	AT, BG, CH, CZ, DK, HR, EE, ES, FI, GB, GR, IE, IT, LT, LV, NO, PT, RO, SE, SI, SK, TR, LU, CY , FR
A1	I3B/P	30	G30	BG, CY, CZ, DK, GB, HR, EE, FI, FR, GR, HU, IT, LT, LV, MT, NL, NO, RO, SE, SI, SK, TR
A1	I3B/P	50	G30	AT, DE, CZ, CH, FR, SK
A1	I3P	37	G31	BE, CH, CZ, ES, GB, GR, IE, RO, SI, SK, FR, NL, PT, HR, IT, LT, PL, TR
A1	I3+	28-30/37	G30/G31	BE, CH, CY, CZ, EE, ES, FR, GB, GR, IE, IT, LT, PT, SI, SK, TR
A1	II2E3B/P	20, 50	G20, G30	DE, PL, RO
A1	II2ELL3B/P	20, 20, 50	G20, G25, G30	DE

Execution	Product Category	Connection overpressures (mbar)	Used gas	Country of destination
A1	II2E+3+	20/25, 28-30/37	G20/G25, G30/G31	BE, FR
A1	II2H3B/P	20, 30	G20, G30	BG, CZ, GB, DK, HR, EE, FI, GR, IT, LT, LV, NO, RO, SE, SI, SK, TR, CY, FR
A1	II2H3B/P	20, 50	G20, G30	AT, CH, CZ, FR, SK
A1	II2H3P	20, 37	G20, G31	CH, CZ, ES, GB, GR, IE, RO, SI, SK
A1	II2H3+	20, 28-30/37	G20, G30/G31	CH, CY, CZ, EE, ES, GB, GR, IE, IT, LT, PT, SK, SI, TR

4. LOCATION GAS

For the correct activity and location of the appliance, it is necessary to observe all directives and standards of the country. Expand the device and check that the device has not been damaged during transport. Place the device on the horizontal surface (maximum inequality up to 2 °). Minor inequalities can be balanced with regulated legs. If the device is located in contact with the walls of the furniture, they must withstand temperatures up to 60 ° C. Installation, adjustment, commissioning must be carried out by a qualified person who is authorized for such acts, according to valid standards. The device can be installed separately or in a series with our production devices. It is necessary to follow a minimum distance of 10 cm from flammable materials. In this case, it is necessary to ensure the appropriate adjustments to ensure the thermal insulation of flammable parts. The appliance must only be installed on a non -flammable surface or at a non -flammable wall. **The smallest required air flow from the outdoor space for appliances in design and in the range of 5-20 m3/h, depending on the type of appliance. It depends on the installation regulations for the country of destination. Components of the appliance secured by the manufacturer. Or his representative must not rebuild the worker's installation of the product. The device must be installed in a suitably ventilated environment.**

5. SAFETY MEASURES FOR FIRE PROTECTION

- the appliance may only be operated by adults
- the appliance may be used safely in accordance with applicable market standards:

Fire protection in spaces with special risk or danger

Protection against the effects of heat

- the appliance must be placed so that it stands or hangs firmly on a non-combustible surface

Objects of flammable substances must not be placed on the appliance at a distance less than a safe distance from it (the smallest distance between the appliance and flammable substances is 10 cm).

Table: degree of flammability of building materials included in st. flammability of substances and products

Degree of flammability	Building materials
A - non-flammable	granite, sandstone, concrete, brick, ceramic tiles, plaster
B - Not easily flammable	Acumin, Heraclitus, Lihnos, Itaver
C1 - highly flammable	wood, hardwood, plywood, hard paper, umakart
C2 - moderately flammable	chipboards, solodur, cork boards, rubber, flooring
C3 - Highly flammable	wood fiber boards, polystyrene, polyurethane, PVC

- information on the degree of flammability of common building materials is given in the table above. Appliances must be installed in a safe manner. During installation, the relevant design, safety and hygiene regulations must also be respected:
- fire safety of local appliances and heat sources

- fire protection in areas with special risk or danger
- protection against the effects of heat

6. INSTALLATION

Important: The manufacturer does not provide any warranty for defects arising as a result of incorrect use, failure to follow the instructions contained in the attached user manual and mishandling of appliances. Installation, modification and repair of appliances for large kitchens, as well as their dismantling due to possible damage to the gas supply, can only be carried out on the basis of a maintenance contract, this contract can be concluded with an authorized dealer, while technical regulations and standards and regulations must be observed regarding installation, electrical supply, gas connection and work safety. Technical instructions for installation and adjustment, for use by specialized technicians ONLY. The instructions that follow refer to a technician qualified for installation to carry out all operations in the most correct manner and according to the applicable standards. Any activity related to regulation etc. must only be performed with the device disconnected from the network. If it is necessary to keep the appliance under voltage, the utmost care must be taken. The type of appliance for extraction is declared on the nameplate, it is an A1 appliance.

7. THERMAL OUTPUT CHECK

Appliances must be checked to verify their thermal power input: The heat output is marked on the label or can be found in this manual. It is necessary to verify first if the appliance is made for the same type of gas to be used and therefore If the label corresponds to the gas type label to be used. To convert to another type of gas, it is necessary to check if the type of gas marked corresponds which is recommended in this manual. The pressure is measured by the pressure gauge of the necessary sensitivity. The pressure gauge is connected to the appropriate location, so it is necessary to unscrew the screw with an airtight cap and connect the pressure gauge. After the measurement, it is necessary to screw the screw back and check its tightness.

8. CONNECTING GAS CONNECTION HOSE

The gas must be connected by a tube with a maximum length of 1.5 meters of galvanized steel, copper or flexible steel hose in accordance with the applicable ground standards. Each device must have a closable tap at the inlet to easily stop the gas supply. After installing the device, we must check any gas leaks. Never check the leaks with an open fire. Materials that do not cause corrosion, for example, a soap water solution, must be used to check gas leakage. The devices underwent a thorough inspection of the manufacturer, the data on the type of gas, pressure and type of the device are listed on the label with characteristics. LPG bottles must be equipped with a controller that corresponds to the gas pressure on the equipment label in accordance with the applicable country's legislation.

9. LIQUID GAS CONNECTION

Connecting the appliance to the gas distribution system must be made by a steel or copper hose suitable for valid national requirements. This must be checked regularly and replaced as needed. Each appliance must be equipped with a closing tap and a quick slip. The quick slip must be freely accessible and within range of the device. After the installation, it is necessary to check that there is no gas leakage. To determine leaks we use soapy water or detection sprays to determine possible leaks. Do not use corrosion -causing substances! All our appliances are carefully inspected. The type of gas, pressure and designation of the relevant category are listed on the production label. Connection to liquid gas: The pressure for liquid gas connection must be 28 or 30 mbar for propane/butane and 37 mbar for propane. It is necessary to check the label, measure the pressure and check the parameters of the installed nozzles with the required nozzle parameters according to the manufacturer's requirements. If the pressure is less than 25 mbar or greater than 37 mbar must not be connected to the appliance Natural gas connection: The pressure when connecting to methane must be 18 or 20 mbar. It is necessary to check the label, measure the pressure and check the parameters of the installed nozzles with the required nozzle parameters according to the manufacturer's requirements. If the pressure is less than 15 mbar or higher than 22.5 mbar must not be connected to

the appliance

10. CHECK DEVICE SETTINGS FOR GAS TYPE

Our appliances are certified and regulated for natural gas (see type plate). Conversion or adaptation to a different type of gas must only be carried out by an authorized technician. Nozzles for different types of gas are in a bag packed with the boiler and are marked in hundredths of mm (technical data table).

11. TECHNICAL DATA OF BURNERS

Data	**Type of gas**						
Burner 8,5 kW	G30 28-30 mbar	G30 37 mbar	G30 50 mbar	G20 20 mbar	G25 25 mbar	G25 20 mbar	G20 25 mbar
Main burner diameter 1/100mm	145	140	130	215	225	245	205
Air kontrol _settings (mm)	open	open	open	3,5	3,5	3,5	3,5
Gas Consumption	0,670 kg/h	0,670 kg/h	0,670 kg/h	0,899 m3/h	1,046 m3/h	1,046 m3/h	0,899 m3/h
Burner 10,8 kW							
Main burner diameter 1/100mm	160	155	140	245	255	270	230
Air kontrol _settings (mm)	90	85	80	330	360	390	300
Gas Consumption	0,852	0,852	0,852	1,143	1,329	1,329	1,143
Burner 6,6 kW							
Main burner diameter 1/100mm	125	115	110	190	200	215	180
Air kontrol _settings (mm) By-pass screw adjustment	70	75	60	210	240	270	180
Gas Consumption	0,520	0,520	0,520	0,698	0,812	0,812	0,698
Burner 4 kW							
Main burner diameter 1/100mm	145	140	130	215	225	245	205
Air kontrol _settings (mm)	open	open	open	closed	closed	closed	closed
Gas Consumption	0,315	0,315	0,315	0,899	1,046	1,046	0,899
Pilot burner							
diameter 1/100mm	19	19	19	27	27	27	27

Data	**Type of gas**					
Burner 8,5 kW	G25.1 25 mbar	G2.350 13 mbar	G27 20 mbar	G31 30-37 mbar	G31 37 mbar	G31 50 mbar
Main burner diameter 1/100mm	240	315	250	145	140	130
Air kontrol _settings (mm)	3,5	open	3,5	open	open	open
Gas Consumption	1,044 m3/h	1,249 m3/h	1,097 m3/h	0,660 kg/h	0,660 kg/h	0,660 kg/h
Burner 10,8 kW						
Main burner diameter 1/100mm	260	350	280	160	155	140
Air kontrol _settings (mm)	390	750	390	90	85	80
Gas Consumption	1,327	1,588	1,394	0,839	0,839	0,839
Burner 6,6 kW						
Main burner diameter 1/100mm	205	270	220	125	115	110
Air kontrol _settings (mm) By-pass screw adjustment	240	360	270	70	75	60
Gas Consumption	0,811	0,970	0,852	0,513	0,513	0,513
Burner 4 kW						
Main burner diameter 1/100mm	240	315	250	145	140	130
Air kontrol _settings (mm)	closed	closed	closed	open	open	open
Gas Consumption	1,044	1,249	1,097	0,660	0,660	0,660
Pilot burner						
diameter 1/100mm	27	36	27	19	19	19

12. CHECK OF THE DEVICE SETTINGS FOR THE TYPE OF GAS

Our appliances are certified and regulated the natural gas (see technical plate). Conversion or adaptation to a different type of gas must be performed by authorized personnel. Nozzles for different types of gas are in a bag provided with the gas cooker and are marked in hundredths of mm (table of technical data pipes).

Nozzle replacement and pressure adjustment (Fig. 1, 2, 3)

It should proceed as follows:

Remove grid from top part of cooker, whole top part of the burner and GN (note 1, 2, 3, 4, fig. 1)

Unscrew nozzle (note 5, fig. 2, 3) with wrench and replace it for another by the desired type of gas.

Perform the assembly in reverse order. Make sure that different parts fit closely to each other. Air control (fig. 3, note 8) is always fully open.

Pilot burner can be adjust so, that is need untie safety nut (note 6, fig. 3) with wrench. Then with wrench number, tie or untie nozzle (note 7, fig. 3) and adjust the flame into desired size.

Important:

After what was done adjusting the appliance to another type of gas, it is necessary to change the gas indicated on the technical plate located in a visible location on the back of the device.

Adjusting flame at reduced performance „SAVING“

Flame at reduced performance „SAVING“, can be set with screw placed in the valve body (note. 1, fig. 5) positioned next to valve shaft

For adjusting proceed as follows:

- Remove the control knob (note. 1, fig. 4) pulling towards you
- Adjust the flame through hole with flat screwdriver

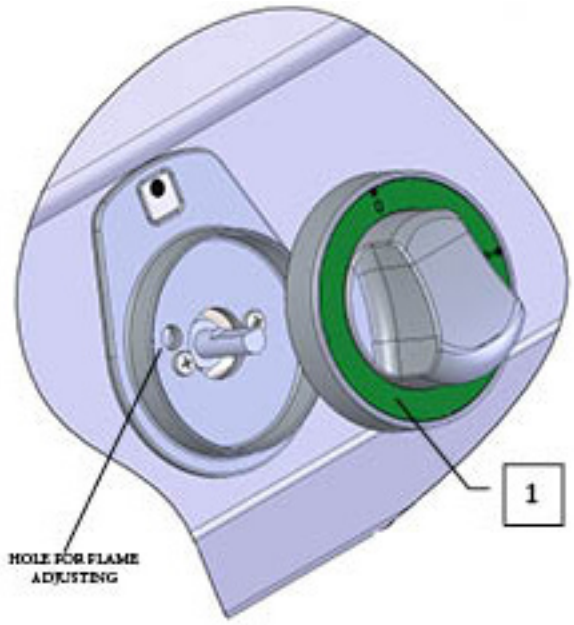

4

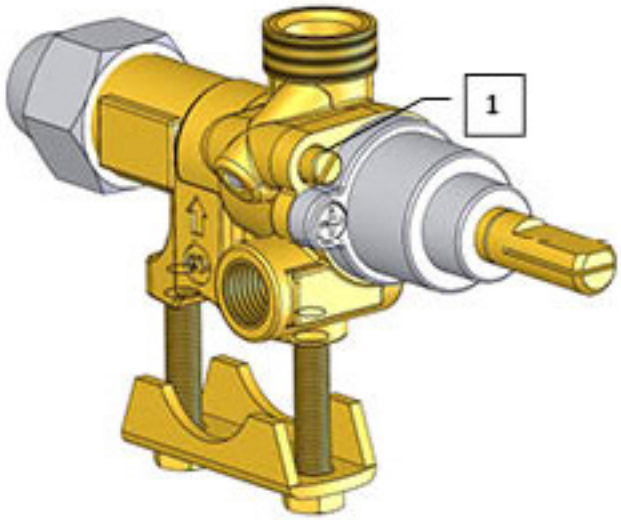

5

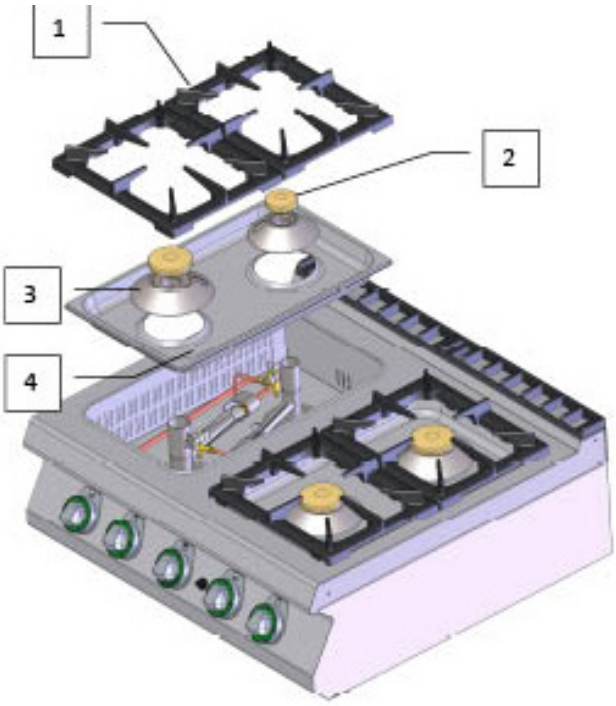

1

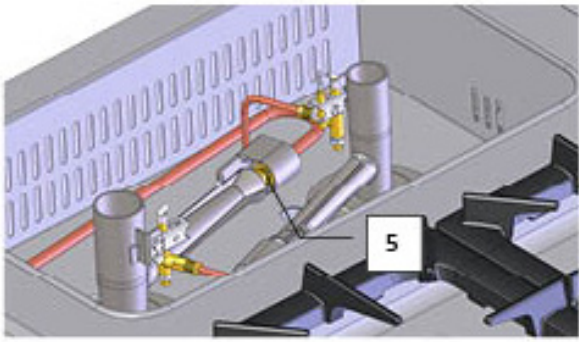

2

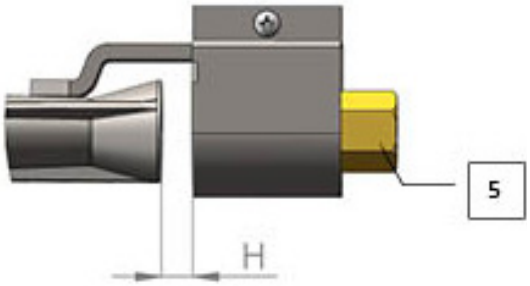

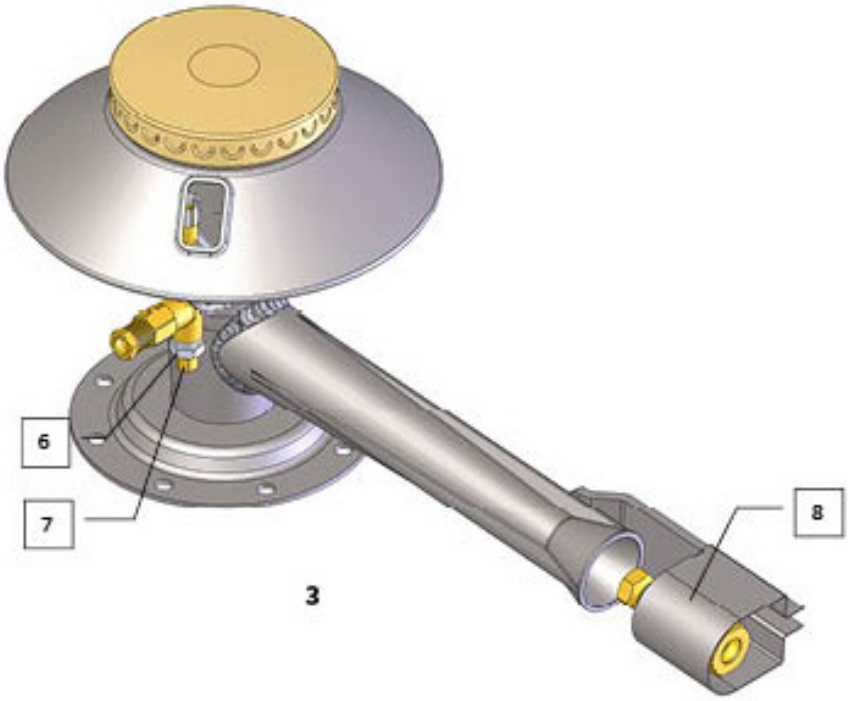

3

13. CHECK THE GAS TYPE THE DEVICE IS ADJUSTED FOR THAL

Our appliances are certified and regulated the natural gas (see technical plate). Conversion or adaptation to a different type of gas must be performed by authorized personnel. Nozzles for different types of gas are in a bag provided with the gas cooker and are marked in hundredths of mm (table of technical data pipes).

Nozzle replacement and pressure adjustment (Fig. 1, 2, 3)

It should proceed as follows:

Remove grid from top part of cooker, whole top part of the burner and GN (note 1, 2, 3, 4, fig. 1)

Unscrew nozzle (note 5, fig. 2, 3) with wrench and replace it for another by the desired type of gas.

Perform the assembly in reverse order. Make sure that different parts fit closely to each other. Air control (fig. 3, note 8) is always fully open.

Pilot burner can be adjust so, that is need untie safety nut (note 6, fig. 3) with wrench. Then with wrench, tie or untie nozzle (note 7, fig. 3) and adjust the flame into desired size.

Important:

After what was done adjusting the appliance to another type of gas, it is necessary to change the gas indicated on the technical plate located in a visible location on the back of the device.

Adjusting flame at reduced performance „SAVING“

Flame at reduced performance „SAVING“, can be set with screw placed in the valve body (note. 1, fig. 5) positioned next to valve shaft

For adjusting proceed as follows:

- Remove the control knob (note. 1, fig. 4) pulling towards you
- Adjust the flame through hole with flat screwdriver

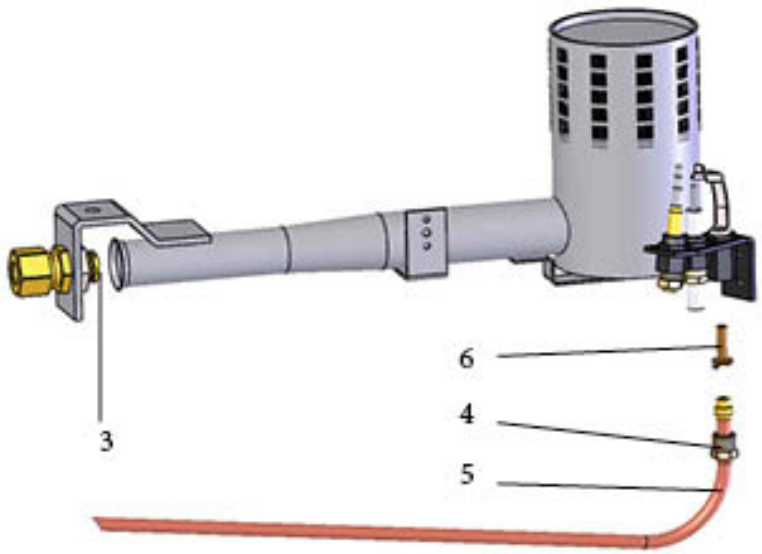

3) Nozzle of main burner

4) Unscrew nut

5) Unmount gas supply copper pipe from pilot nozzle.

6) Replace pilot nozzle for another by the desired diameter

14. INSTRUCTIONS FOR USE

Attention! Before you start using the device, it is necessary to remove the protective films from the entire surface, then wash it well with water and dish soap, and then wipe it with a damp cloth.

Ignition and regulation of the burner

After pressing and turning the control knob of the respective burner to position 1, light the pilot burner. After lighting the pilot burner, keep the button pressed for approx. 30 seconds to heat up the thermal fuse. If the flame goes out, repeat the whole process.

To light the burner at full power, turn the knob to position 2.

We set the „SPORO“ economy mode by lightly pressing the knob and turning it to position 3.

We switch to standby mode by turning the tap to the right to position 1.

If we want to turn off the burner, we press the knob slightly and turn it to the „0“ position.

15. INSTRUCTIONS FOR USE

Ignition of the burner and regulation of the performance

Turn the regulation knob of the competent burner (1) into position „ignition of the main burner“ and then press it down and hold it. Ignite the burner with piezzo lighter (2). After ignition of the burner hold the knob (1) pressed several seconds till the thermofuse gets hot. Then release the button. If the flame goes out repeat the whole process once more.

Lower performance sporo:

By turning the knob (A) into position „sporo“ you set the burning of the burner for sporo (lower performance)

How to switch the burner off:

Turn the knob (A) into position“0“.

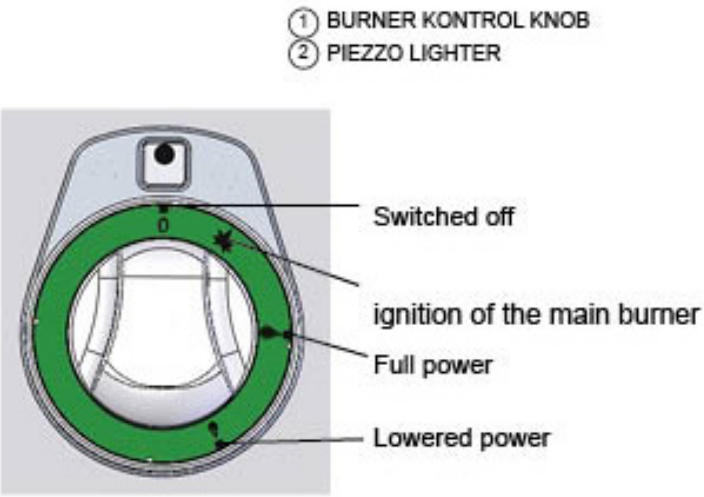

The possibility of a visual inspection of the pilot burner flame, remove the center plate by hook which are included.

16. NOTICE FOR USE – FOR GAS OVENS

A gas oven is a static oven with the heat source located in the lower part. Heating occurs through natural heat circulation without forced convection of hot air. For this reason, uneven temperature distribution may occur during certain types of cooking, especially:

higher temperature near the bottom and around the edges of the oven, faster heat impact on the edges of the gastronorm container, restricted circulation of warm air.

When baking dishes in a GN (gastronorm) container, the container itself may limit the natural circulation of hot air around the food, which can result in the edges of the dish being exposed to more heat than the center. This characteristic is due to the design and principle of gas static heating and is not a manufacturing defect.

RECOMMENDED USE:

baking, stewing
baking pastries
keeping food warm

17. CLEANING AND MAINTENANCE

It is recommended to have the device checked with a specialist service at least once a year. All the interventions in the device can only be carried out by a qualified person who has the authorization to do so. **CAUTION!** The device must not be cleaned with direct or pressure water. Clean the equipment daily. Daily maintenance extends the life and efficiency of the equipment. Always turn off the main inlet to the device. Wash the stainless steel parts with a damp cloth with a detergent without coarse particles and wipe dry. Do not use abrasive or corrosive cleaning agents. Attention! Before using the device, it is necessary to remove the protective foil from the entire surface, and then wash it well with water with detergent, and then wipe it with a damp cloth. **ALERT!** The warranty does not apply to all consumables subject to normal wear (rubber seals, bulbs, glass and plastic parts, etc.). The warranty also does not apply to the device if the installation is not carried out in accordance with the instructions - an authorized worker according to the corresponding standards and if the equipment was unprofessionally manipulated (interventions in the internal equipment, etc.) or were operated by unhappy staff and contrary to the instructions for use, further The warranty does not apply to damage by natural effects or other external intervention. **Required service organization 2 times a year. After the lifetime, the shipping packaging and equipment are submitted to the collection, according to the regulations on waste management and hazardous waste.**